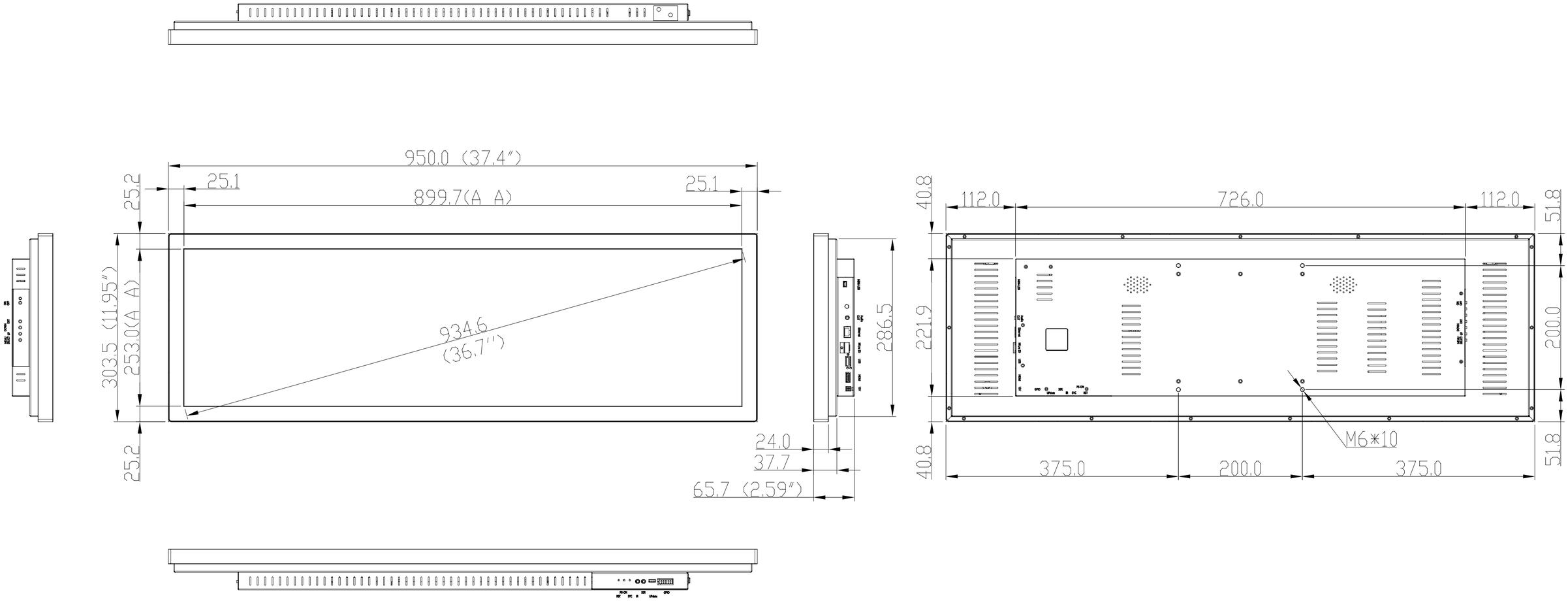

LCD SKU#
20-0129-0279

General Tolerance	
Size Range	Tolerance
0.5~6	±0.05
6~30	±0.1
30~120	±0.15
120~315	±0.25
315~1000	±0.4

Part No.	20-3018-1005
PCBA REV	

Bluefin Technology (Shenzhen) Co., Ltd.

Unit	Date:	Product Name	REV
mm	2023-09-06	37in-Finished with touch, normal bezel	5.1

Scale:	Checked:	Design:	Sheet:
		覃宏造	1 of 1

bluefin
www.thebluefin.com | sales@thebluefin.com | 770.205.6636